GARRISON LOCKS
SECURITY RANGE

HOW TO MEASURE A EURO CYLINDER

Using a tape measure, carefully measure from the outside to the centre fixing screw and from the inside to the centre fixing screw. There are 2 types of cylinder. Equal split ie: 40X40 (80mm Overal length) or offset split 35X45 (80mm Overal length). When ordering an offset Key and Thumbturn cylinder or BSXP cylinders please note the (XP) is the external side and Internal (thumb turn side).

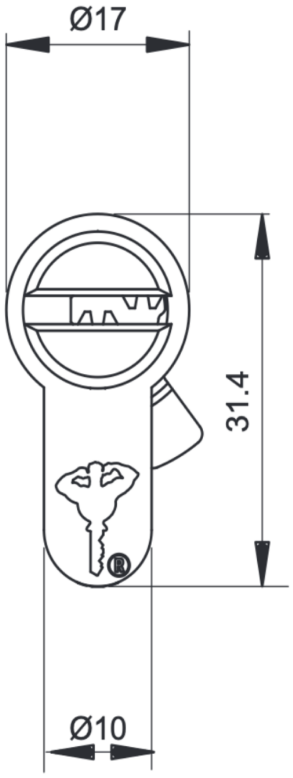

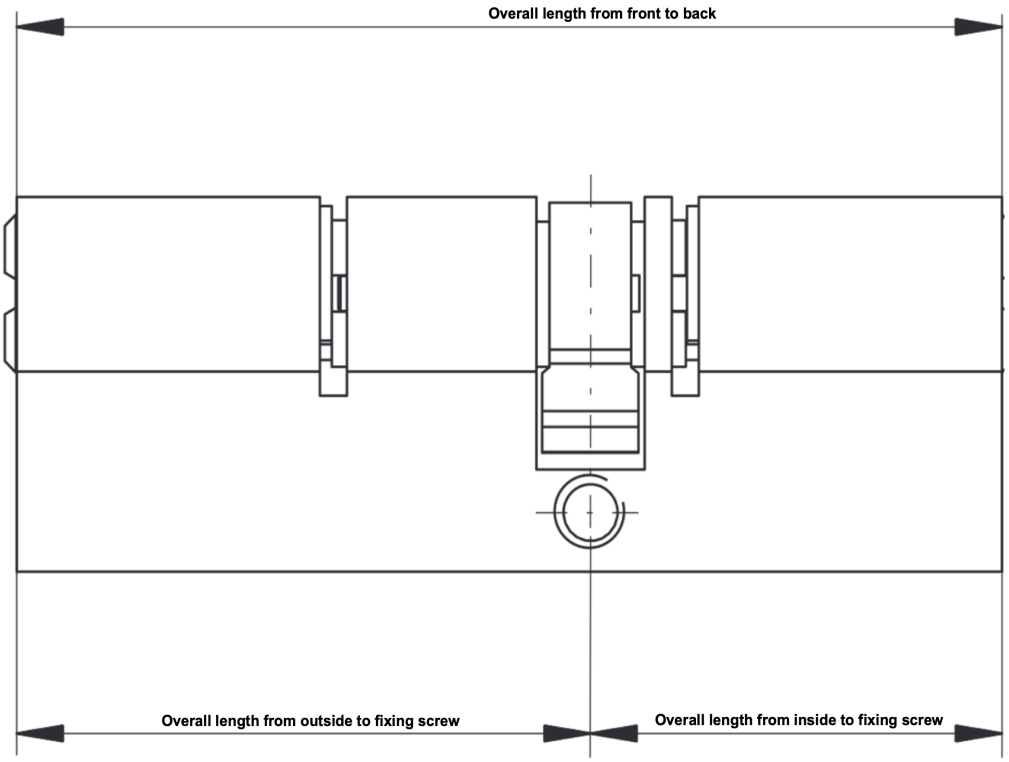

GARRISON LOCKS SECURITY RANGE

E: Enquiries@garrisonlocks.co.uk 01858 464133